Change description	Date	Designed by

MAIN DIMENSIONS

Without functional working area

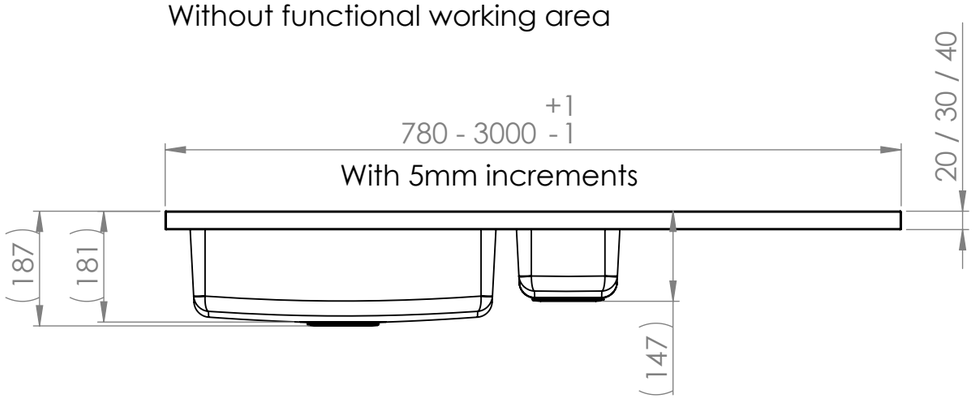

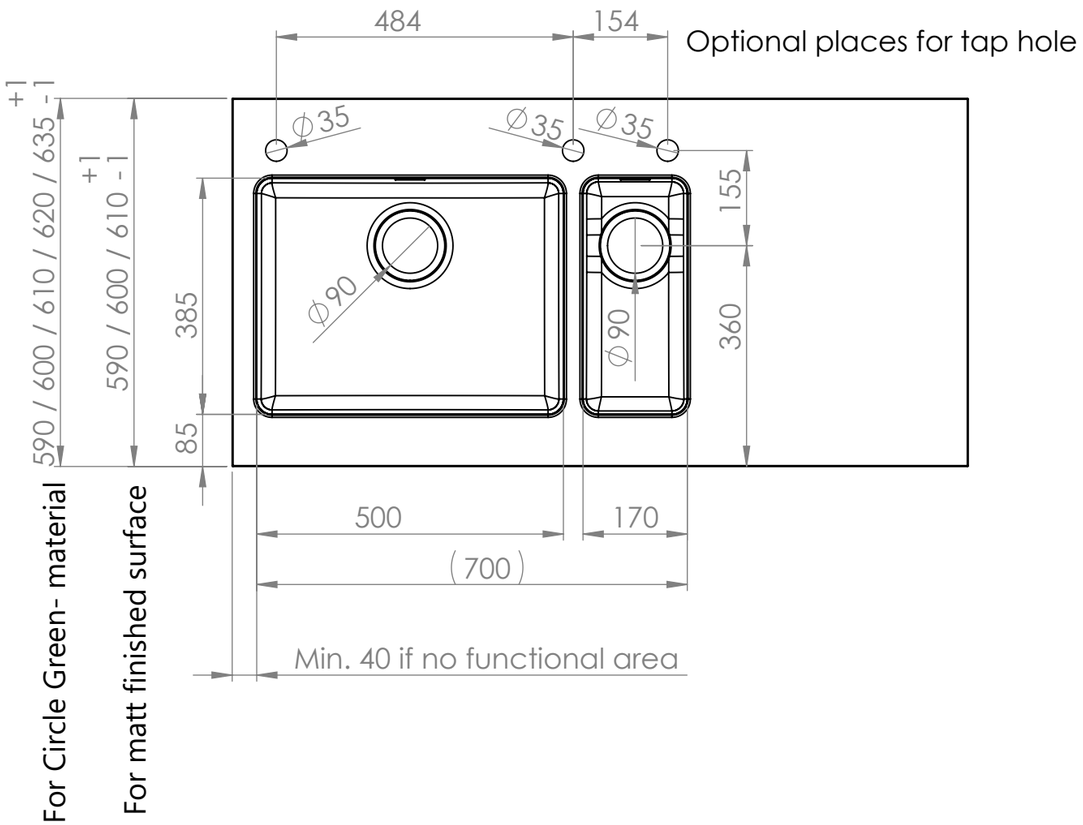

With functional working area
Only with matt finished surface with straight edge profile

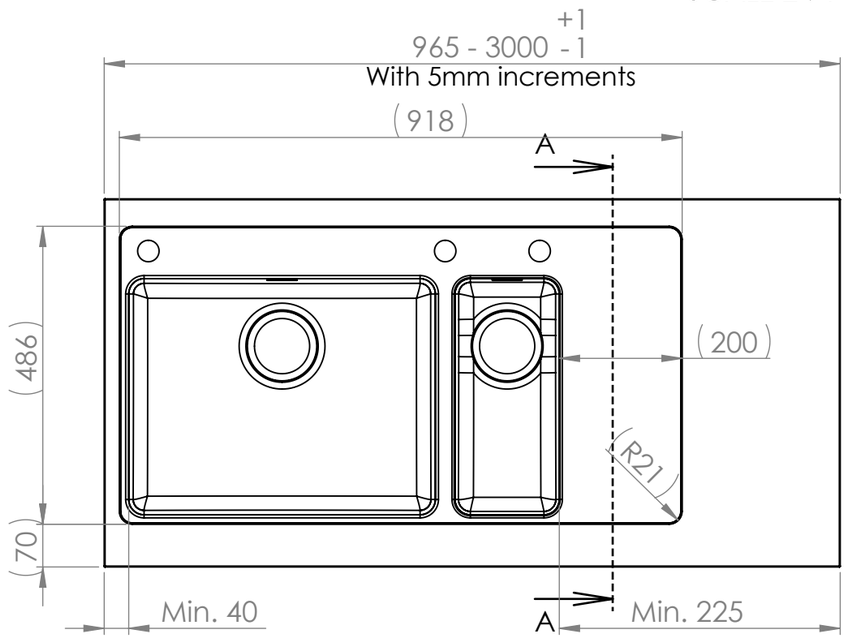

DETAIL B
SCALE 2 : 1

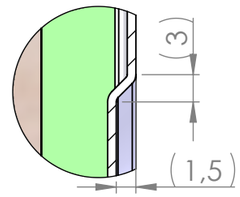

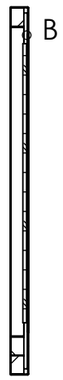

SECTION A-A

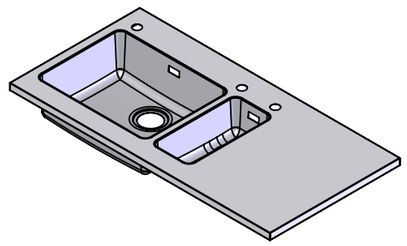

	Mass kg	General tolerance	Designed by VS	Date 25.04.2025
	Size A3 / Scale 1:10	Item	Approved by JP	Date 27.05.2025
STALA Member of ALVEUS		Description S-ONE Technical Data Sheet	Drawing number 19919	Sheet/sheets 1/6
				Rev A

Change description	Date	Designed by

EDGE PROFILES

STRAIGHT EDGE PROFILE

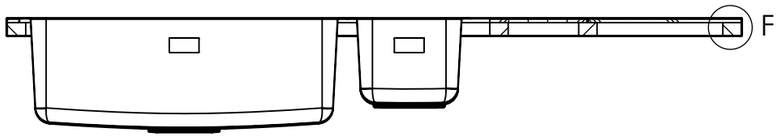

SECTION E-E

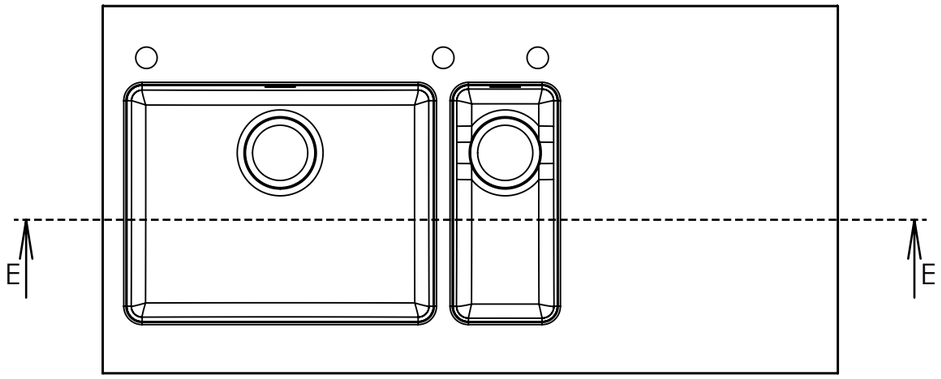

RAISED EDGE PROFILE

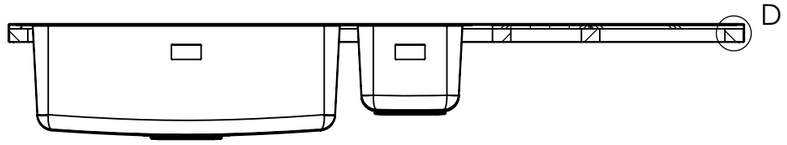

SECTION C-C

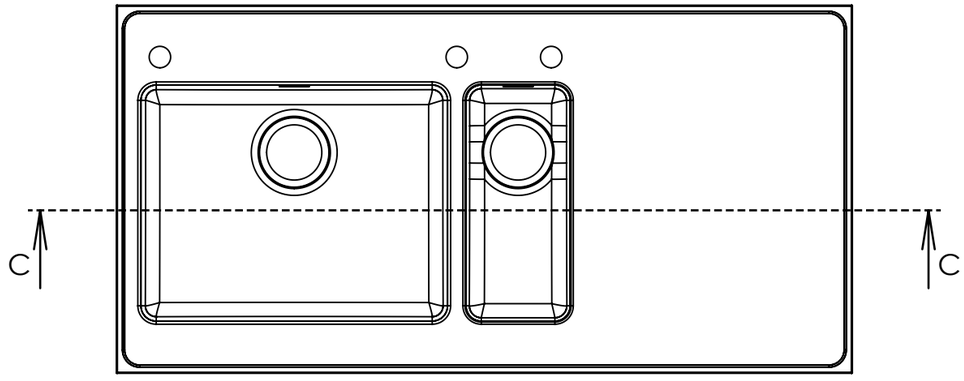

DETAIL F
SCALE 2 : 1

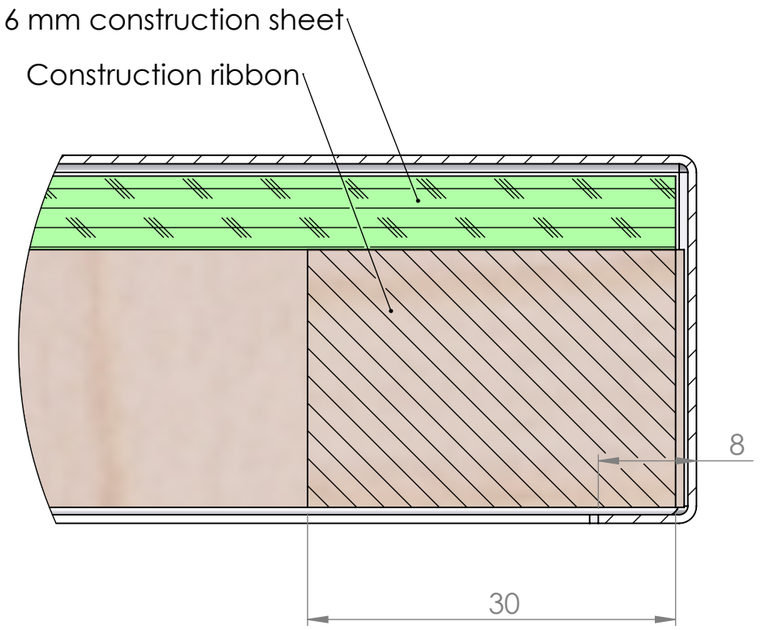

DETAIL D
SCALE 2 : 1

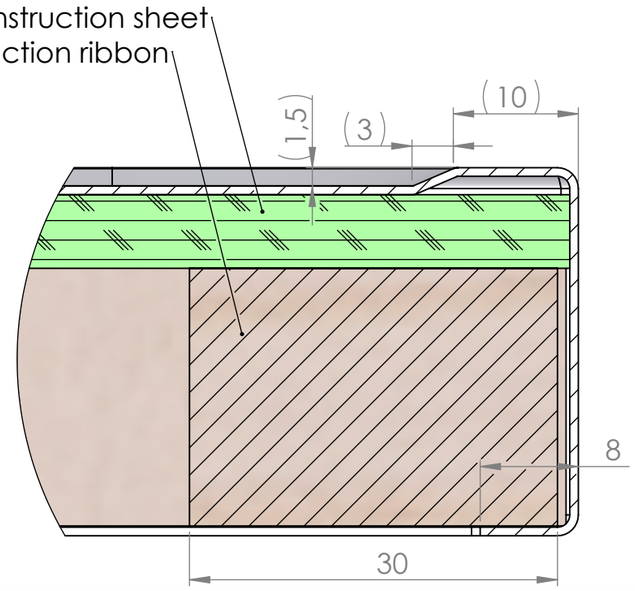

Mass kg		General tolerance	Designed by VS	Date 25.04.2025
Size A3	Scale 1:10	Item	Approved by JP	Date 27.05.2025
STALA Member of ALVEUS		Description S-ONE Technical Data Sheet	Drawing number 19919	Sheet/sheets 2/6
				Rev A

Change description	Date	Designed by

RAISED BACK EDGE

RAISED BACK EDGE ONLY FOR CIRCLE GREEN- MATERIAL
FOR STRAIGHT AND RAISED EDGE PROFILE

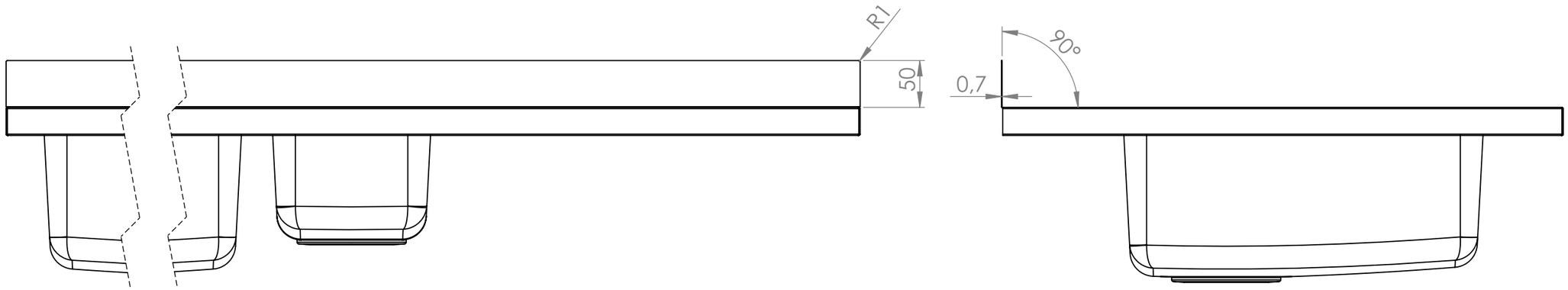

Mass kg		General tolerance	Designed by VS	Date 25.04.2025
Size A3	Scale 1:5	Item	Approved by JP	Date 27.05.2025
STALA Member of ALVEUS		Description S-ONE Technical Data Sheet	Drawing number 19919	Sheet/sheets 3/6
				Rev A

Change description	Date	Designed by

HOB CUT OUT

PRINCIPLE MEASUREMENTS FOR HOB CUTOUT

Without functional area

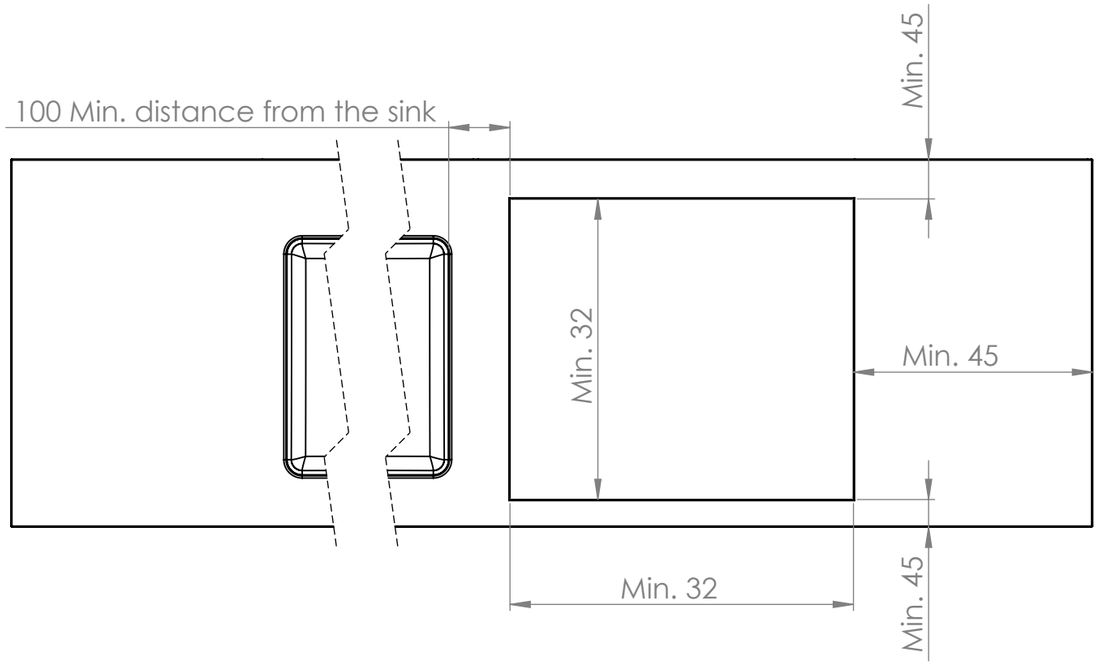

With functional area

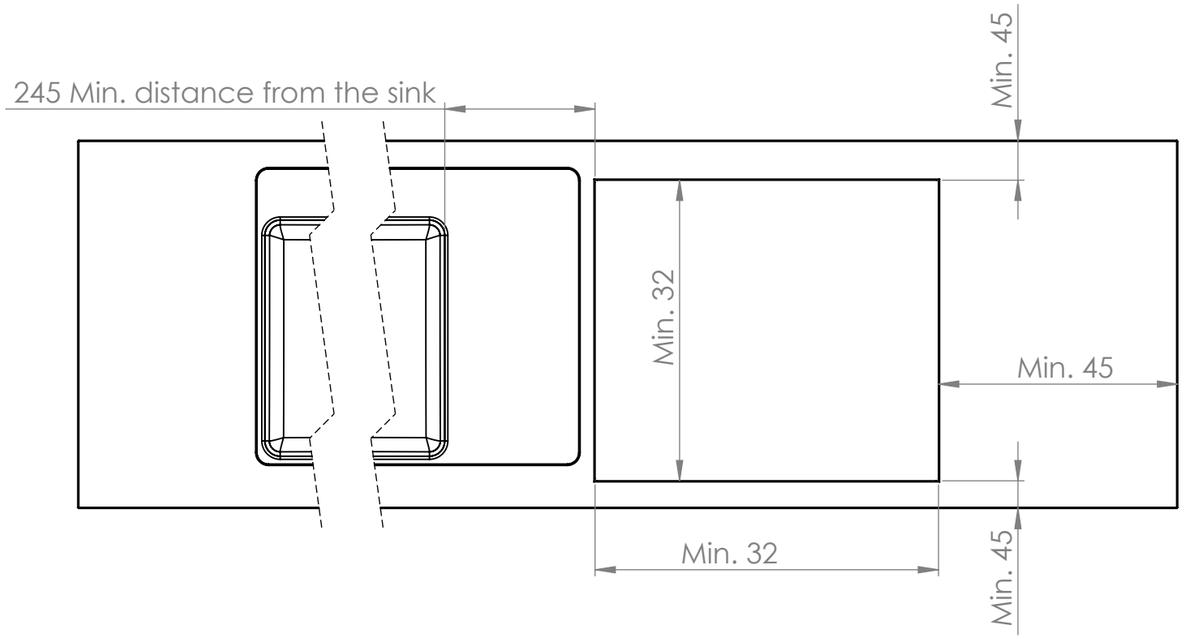

	Mass kg	General tolerance	Designed by VS	Date 25.04.2025
	Size A3 / Scale 1:10	Item	Approved by JP	Date 27.05.2025
STALA Member of ALVEUS		Description S-ONE Technical Data Sheet	Drawing number 19919	Sheet/sheets 4/6
				Rev A

Change description	Date	Designed by

SPACE REQUIREMENTS

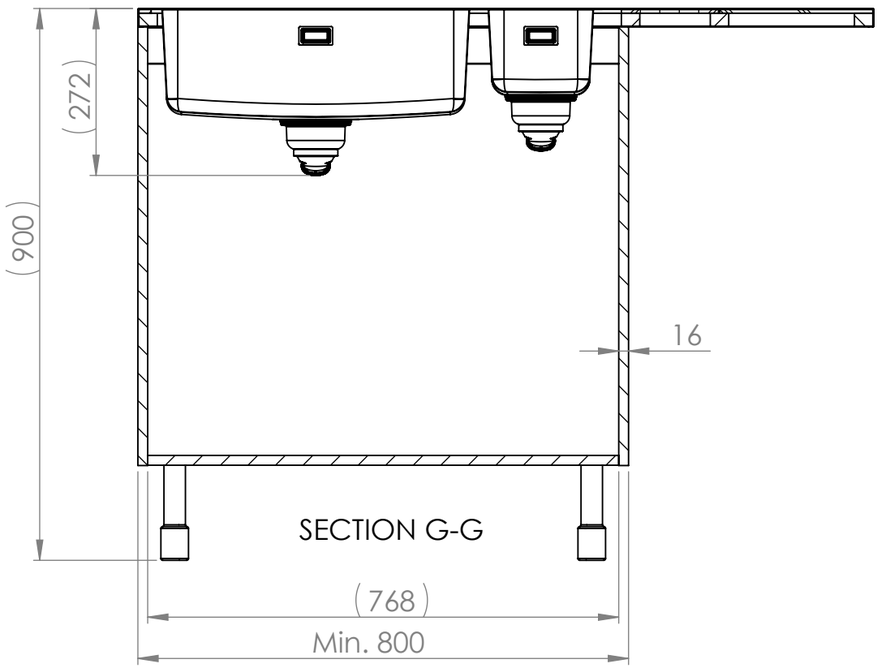

SECTION G-G

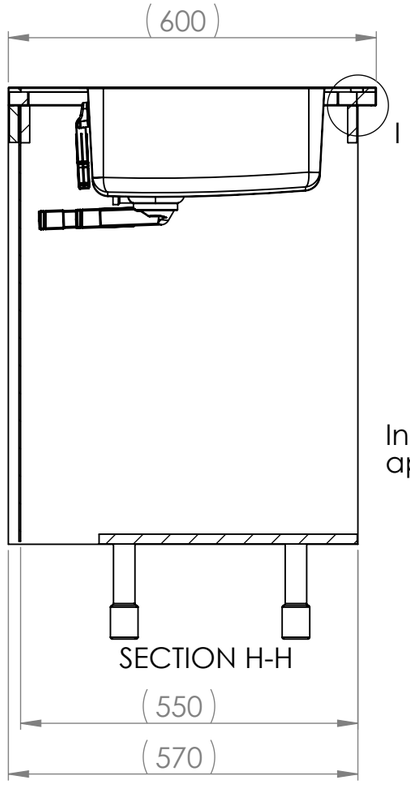

SECTION H-H

DETAIL I
SCALE 1 : 1

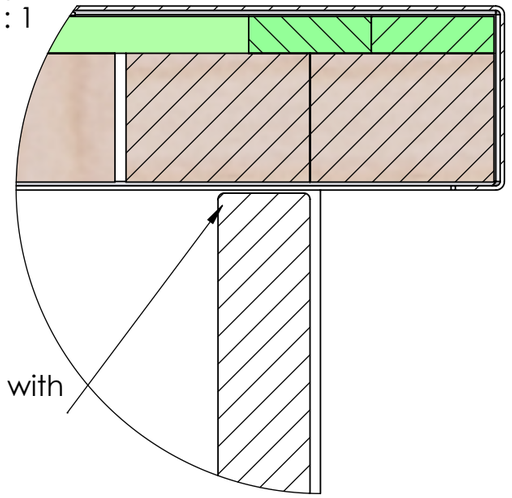

Installation to cabin with appropriate screws

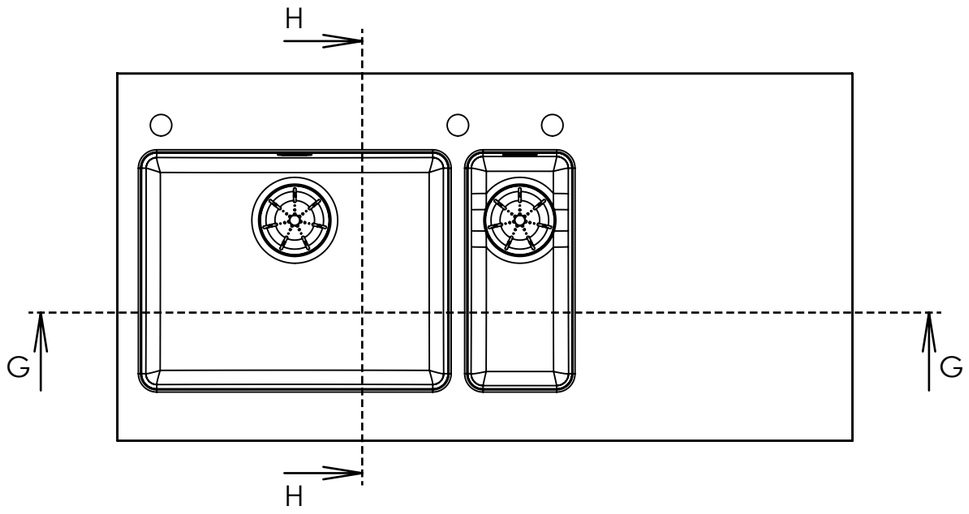

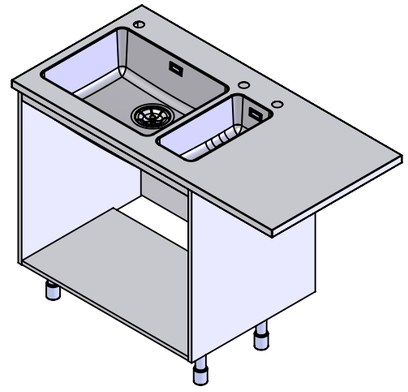

	Mass kg	General tolerance	Designed by VS	Date 25.04.2025
	Size A3 / Scale 1:10	Item	Approved by JP	Date 27.05.2025
STALA Member of ALVEUS		Description S-ONE Technical Data Sheet	Drawing number 19919	Sheet/sheets 5/6
				Rev A

Change description	Date	Designed by

UNDER CONSTRUCTION

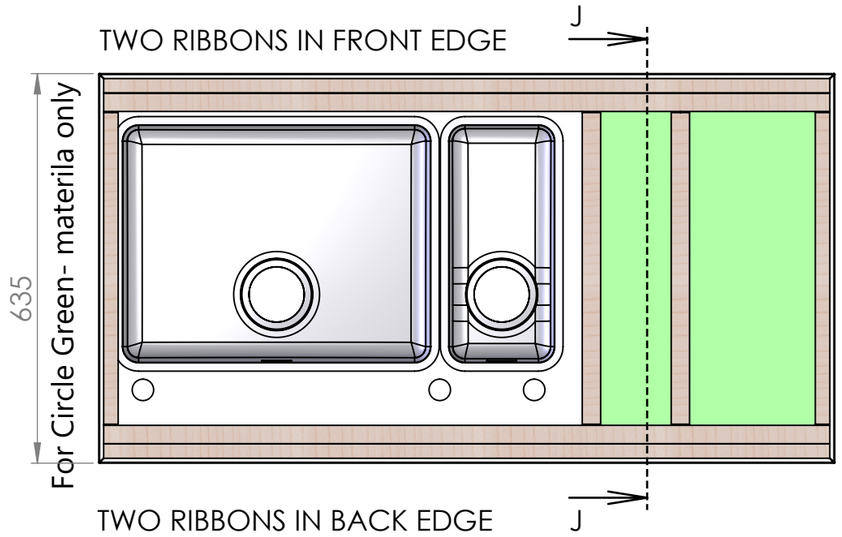

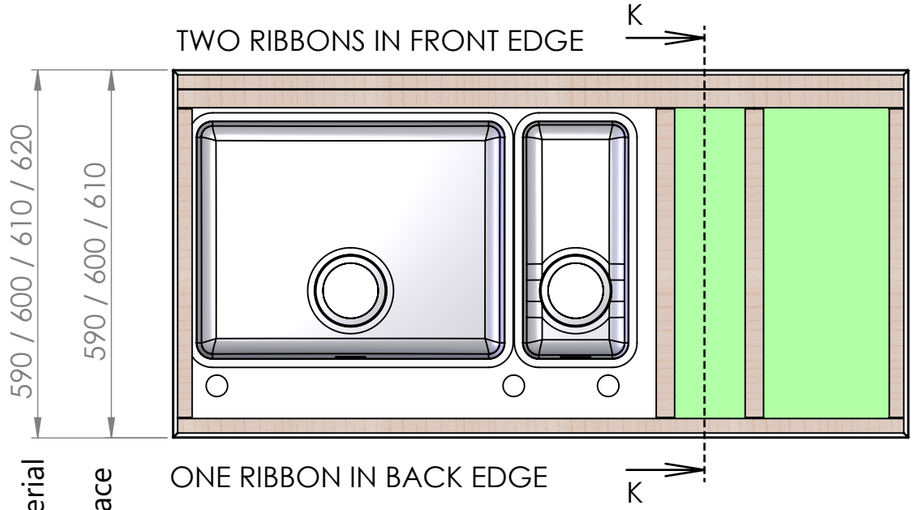

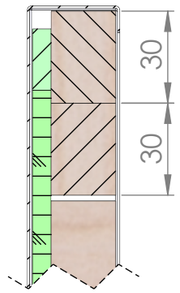

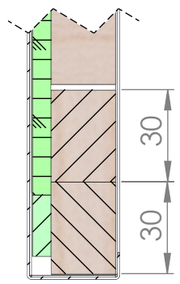

SECTION J-J
SCALE 1 : 2

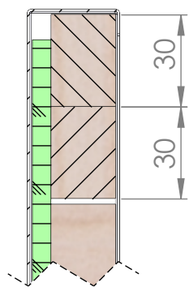

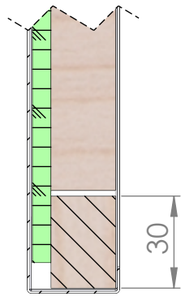

SECTION K-K
SCALE 1 : 2

Mass kg		General tolerance	Designed by VS	Date 25.04.2025
Size A3	Scale 1:10	Item	Approved by JP	Date 27.05.2025
STALA Member of ALVEUS		Description S-ONE Technical Data Sheet	Drawing number 19919	Sheet/sheets 6/6
				Rev A